SIMON GX53 LED - FLAT DIFFUSER

LARGE SIZE

Square lantern in classic style, made of shockproof resin material, UV-rays stabilized, rust and corrosion- free. Modular construction suitable for post top, hanging and wall installation. Supplied as standard with **FLAT diffuser** and equipped with TÜV-CB certified, long-life, powerful, efficient and **Kelvin settable GX53 LED modular system**. Designed according to the international regulations against light pollution (standard UNI 10819). Insulation class II, Protection rating IP 55.

*Lanterna quadra in stile classico, realizzata in resina antiurto, stabilizzata ai raggi UV, inattaccabile da ruggine e corrosione. Idonea per il montaggio a palo, a sospensione o a parete. Fornita con **diffusore piatto** ed equipaggiata con **sistema modulare a LED GX53** con Kelvin impostabile, certificato TÜV-CB di lunga durata ed alta efficienza. Progettato in ottemperanza alle norme internazionali contro l'inquinamento luminoso (standard UNI 10819). Classe di isolamento II, grado di protezione IP55.*

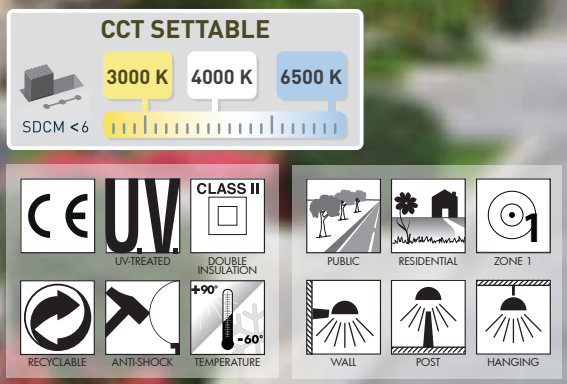

U35.132.D4K

MADE IN ITALY

SIMON GX53 LED - FLAT DIFFUSER

LARGE SIZE

SIMON GX53 LED - LANTERN COMPONENTS

IP55

Decorative **PINNACLE** to be mounted on the roof top for post installation or on the lantern base for hanging installation.

PINNACOLO *decorativo applicabile alla sommità del tetto (montaggio a palo) o sulla base della gabbia (montaggio a sospensione).*

LANTERN ROOF made of shockproof resin material, UV-rays stabilized. Tool-free opening for relamping and maintenance.

TETTO *realizzato in resina antiurto, stabilizzata ai raggi UV. Removibile senza l'ausilio di attrezzi per manutenzione e cambio lampadina.*

DIFFUSER with flat shape made of UV-rays stabilized polymethylmethacrylate (PMMA), provided with silicone rubber gasket to ensure an increased protection against external agent.

DIFFUSORE *in polimetilmetacrilato (PMMA) con configurazione piatta, provvisto di guarnizione in gomma siliconica per garantire una migliore protezione contro gli agenti esterni.*

CAGE made of shockproof resin material, UV-rays stabilized, rust and corrosion-free.

GABBIA *realizzata in resina antiurto, stabilizzata ai raggi UV, inattaccabile da ruggine e corrosione.*

SIMON GX53 LED

U35.000 *

Dimensions and weight
Height: 560 mm
Width: 330 mm
Depth: 330 mm
Weight: 4,6 Kg
Junction to support: diameter 60 mm
Area exposed to wind pressure:
CxS = m² 0,102

Moulded colours:
Black *White*

Painted colours:
Antique green *Antique bronze*

Diffuser PMMA:
Clear *Opal*

GX53 LED

- **COST SAVING:** long-life and efficient LED light sources.
- **BUILT-IN DRIVER:** quick and easy lamp replacement.
- **GREAT FLEXIBILITY:** GX53 standard lamp holder.
- **FUTURE-PROOFED LUMINARIES:** performances easy to upgrade to latest technology developments.
- **SUITABLE FOR OUTDOOR USE:** built-in driver fully protected against heat and humidity by silicone paste.

Lantern supplied with white resin CEILING provided with 4x TÜV-CB certified, long-life, efficient and **Kelvin settable GX53 LED lamps included**. Each lamp can be quickly and easily replaced individually, making the luminaries maintenance very simple.

100 - 240 V

LAMP	POWER	LUMINOUS FLUX (Φ TOTAL) UP TO	COLOUR TEMP.	*ADD. SUFFIX
GX53 LED	4x 10 W **40 W**	**5160 lm**	6500 K	.D4K
			4000 K	
			3000 K	

LED LAMPS

TÜV SÜD CE CB LVD EMC ERP

Comply with: EU2019/2015
EU2019/2020

Technical details on page 636.

CCT SETTABLE LED LAMP

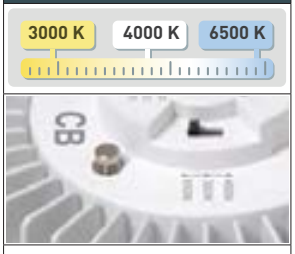

CCT switch settable in three different positions, to select the desired Kelvin temperature (3000K/4000K/6500K) and get a customized ambiance.

PHOTOMETRIC DATA SAMPLE

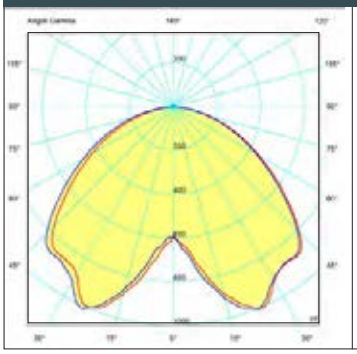

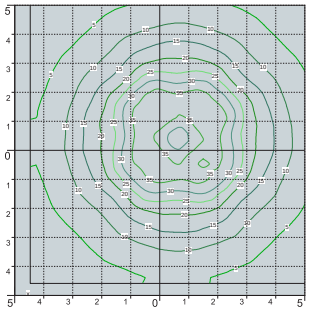

SIMON GX53 LED
4X10W

POST height 4mt
10x10mt area: average 22 lux

The photometric data for all the versions are available upon request or on our website.

SIMON

LARGE SIZE

MADE IN ITALY

OFIR/SIMON

U33.132

GX53 U35.132

Pcs 1
Kg 5,6
mc 0,061

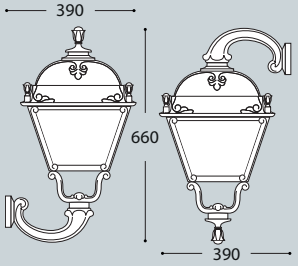

EVA/SIMON

U33.181

GX53 U35.181

Pcs 1
Kg 12,3
mc 0,168

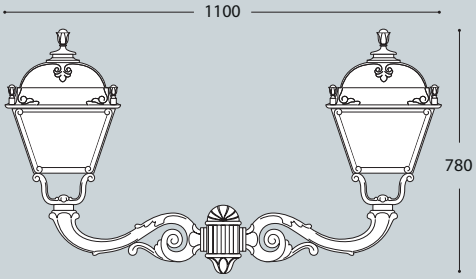

SIMON

U33.000

GX53 U35.000

Pcs 1
Kg 4,6
mc 0,043

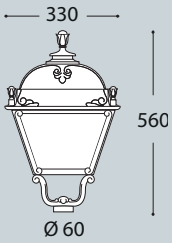

LOT/SIMON

U33.113

GX53 U35.113

Pcs 1
Kg 5,8
mc 0,061

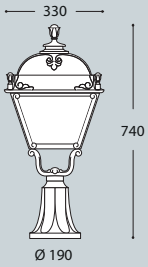

MIRRA/SIMON

U33.142

GX53 U35.142

Pcs 1
Kg 10,9
mc 0,083

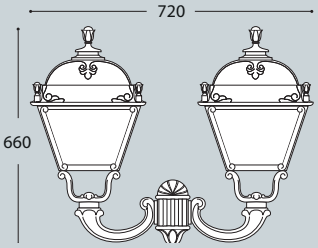

SICHEM/SIMON

U33.121

GX53 U35.121

Pcs 1
Kg 5,4
mc 0,061

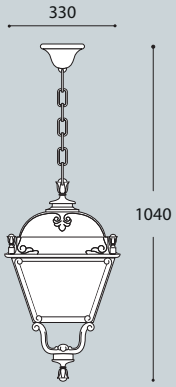

RICU/SIMON

U33.157

GX53 U35.157

Pcs 2
Kg 29,2
mc 0,334

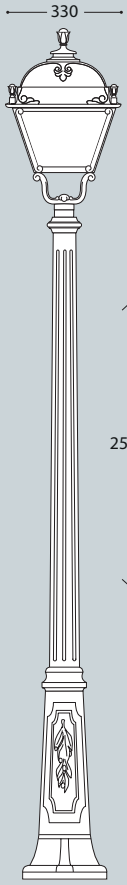

GIGI/SIMON

U33.156

GX53 U35.156

Pcs 2
Kg 27,7
mc 0,304

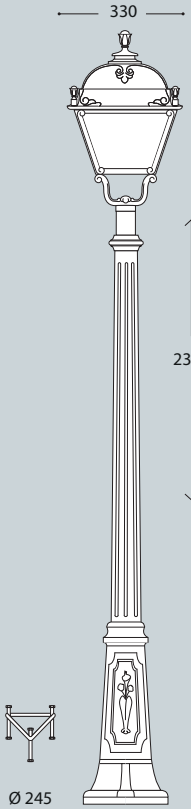

ARTU'/SIMON

U33.158

GX53 U35.158

Pcs 2
Kg 24,7
mc 0,273

ALOE'.R/SIMON resin

U33.163

GX53 U35.163

Pcs 2
Kg 15,2
mc 0,208

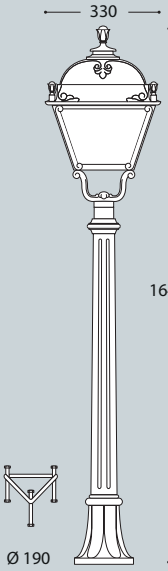

IAFET.R/SIMON resin

U33.162

GX53 U35.162

Pcs 2
Kg 14,5
mc 0,179

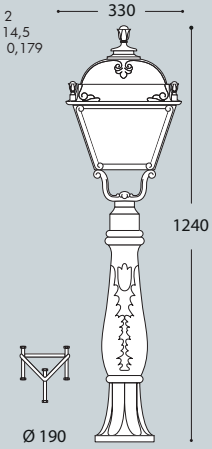

NEBO/SIMON

LARGE SIZE

MADE IN ITALY

NEBO/SIMON

LARGE SIZE

NEBO OFIR/SIMON 2L

U33.201.R20

GX53 U35.201.R20

Pcs 1
Kg 31,9
mc 0,268

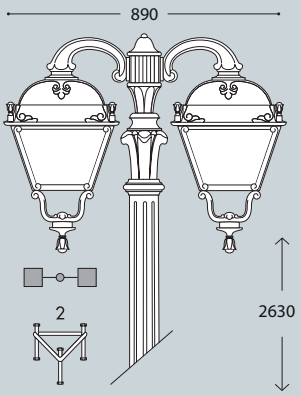

NEBO OFIR/SIMON 3L

U33.201.R30

GX53 U35.201.R30

Pcs 1
Kg 36,5
mc 0,342

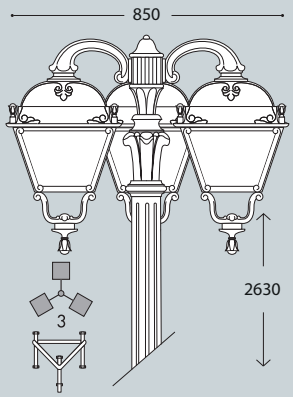

NEBO/SIMON

U33.201

GX53 U35.201

Pcs 1
Kg 25,6
mc 0,196

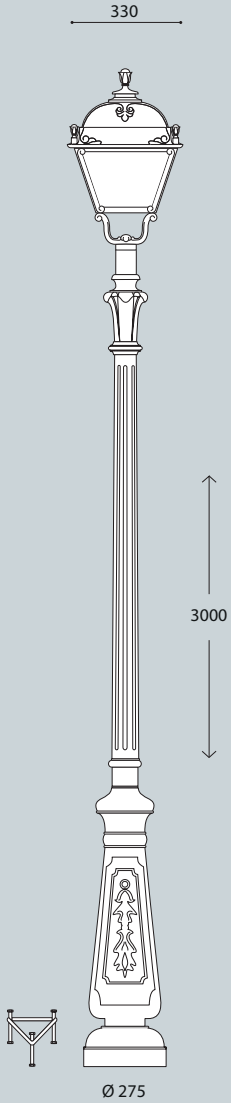

NEBO OFIR/SIMON 2L

U33.201.R20

GX53 U35.201.R20

Pcs 1
Kg 31,9
mc 0,268

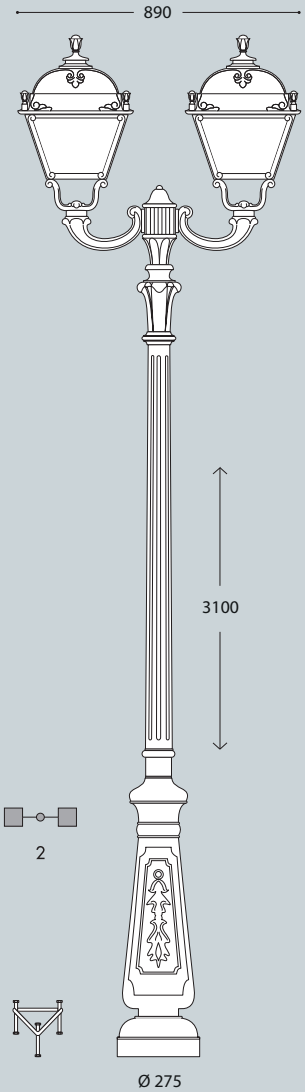

NEBO OFIR/SIMON 3L

U33.201.R30

GX53 U35.201.R30

Pcs 1
Kg 36,5
mc 0,342

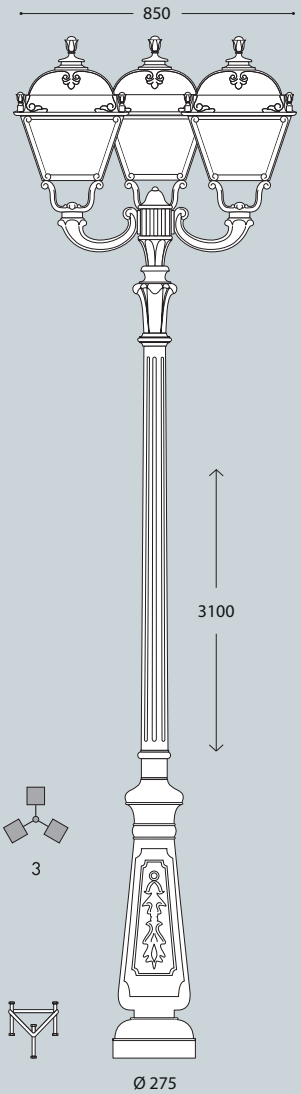

TABOR/SIMON

LARGE SIZE

MADE IN ITALY

TABOR/SIMON

LARGE SIZE

TABOR OFIR/SIMON 2L

U33.204.R20

GX53 U35.204.R20

Pcs 1
Kg 36,5
mc 0,268

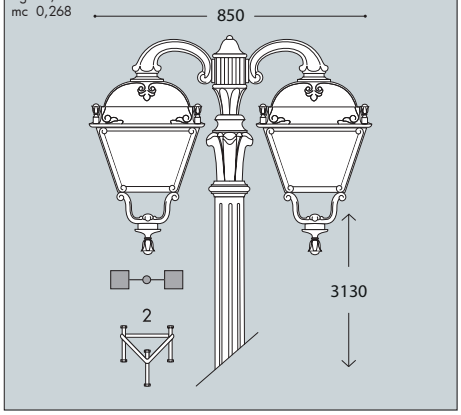

TABOR OFIR/SIMON 3L

U33.204.R30

GX53 U35.204.R30

Pcs 1
Kg 41,1
mc 0,342

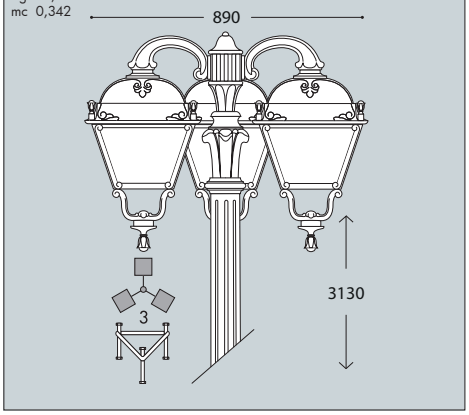

TABOR/SIMON

U33.204

GX53 U35.204

Pcs 1
Kg 30,1
mc 0,196

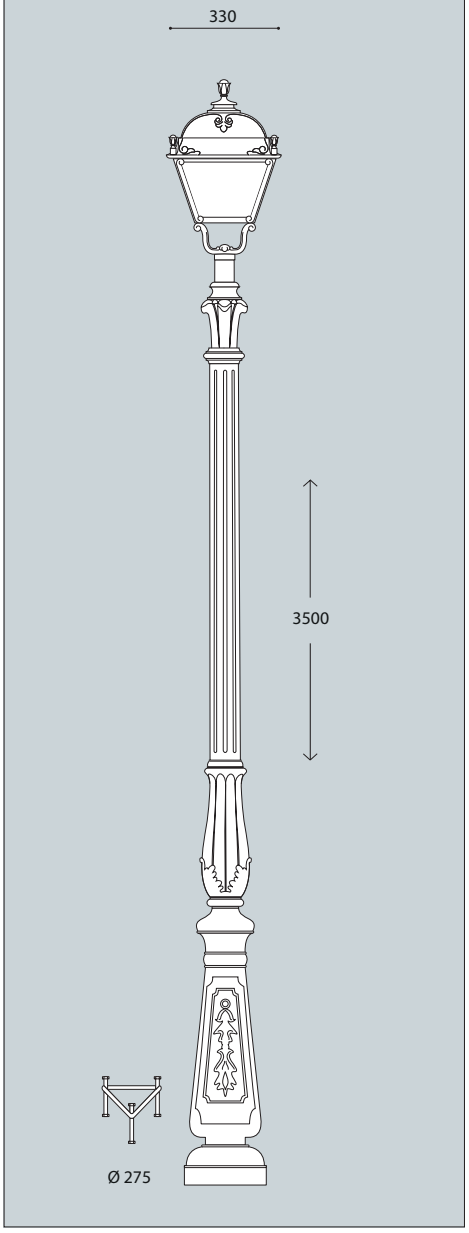

TABOR OFIR/SIMON 2L

U33.204.R20

GX53 U35.204.R20

Pcs 1
Kg 36,5
mc 0,268

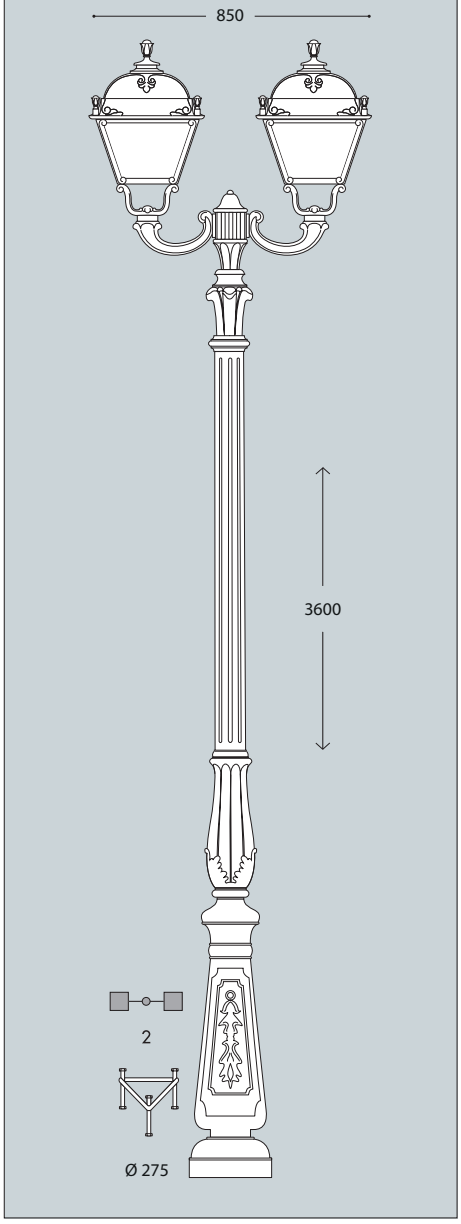

TABOR OFIR/SIMON 3L

U33.204.R30

GX53 U35.204.R30

Pcs 1
Kg 41,1
mc 0,342

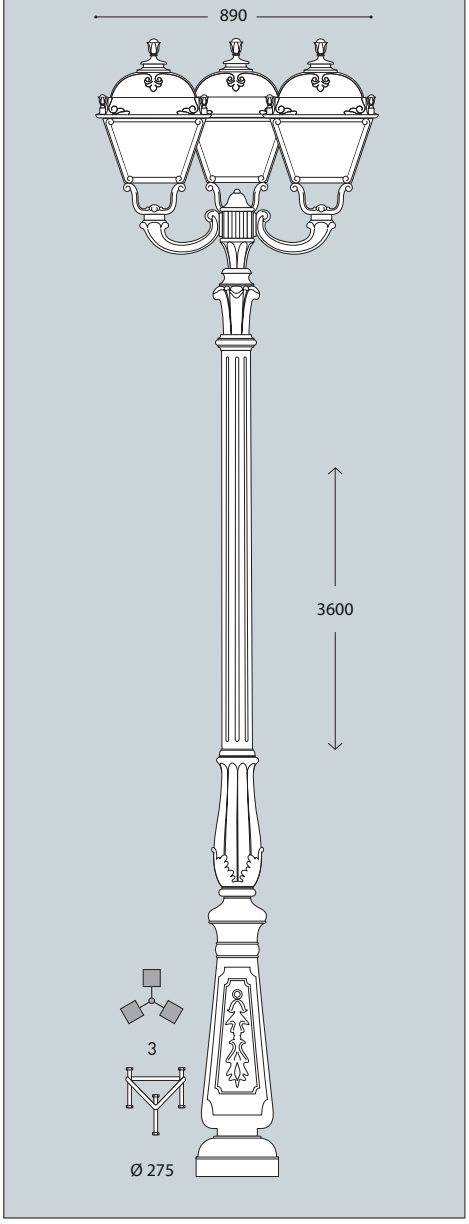

HOREB/SIMON

LARGE SIZE

MADE IN ITALY

ADAM/SIMON

U33.171

GX53 U35.171

Pcs 1
Kg 6,1
mc 0,083

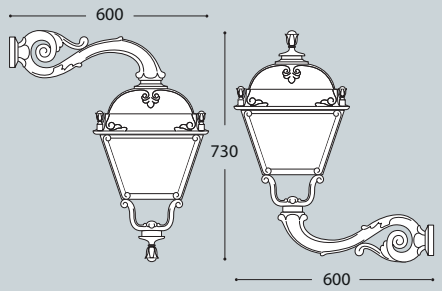

HOREB/SIMON

U33.207

GX53 U35.207

Pcs 1
Kg 32,6
mc 0,249

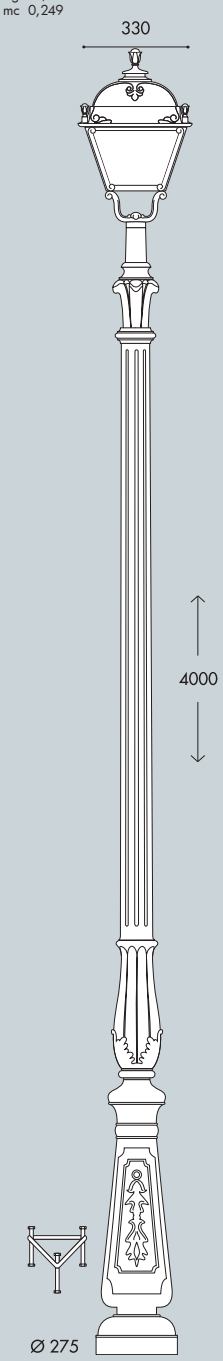

HOREB ADAM/SIMON 3+1

U33.207.M31

GX53 U35.207.M31

Pcs 1
Kg 52,4
mc 0,476

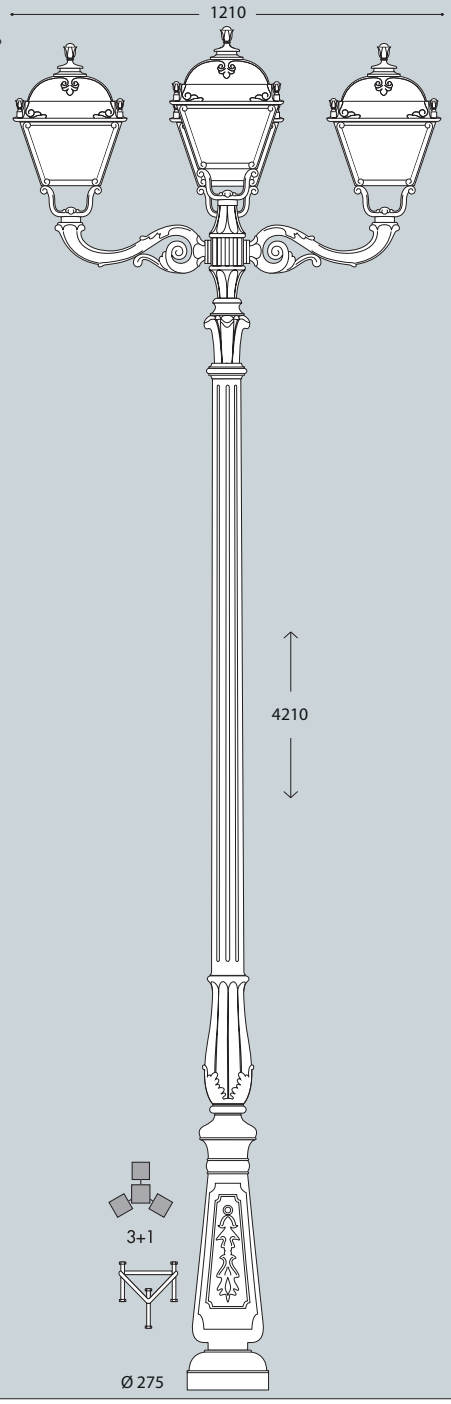

HOREB ADAM/SIMON 2+1

U33.207.M21

GX53 U35.207.M21

Pcs 1
Kg 46,4
mc 0,404

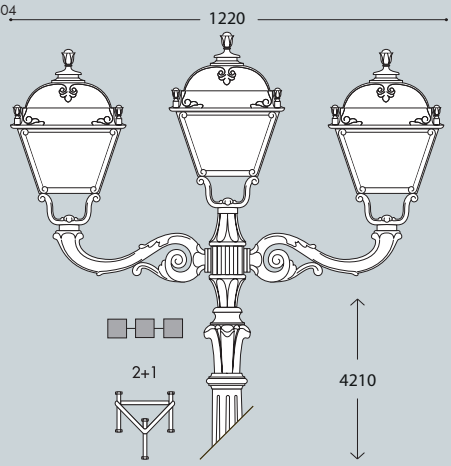

HOREB ADAM/SIMON 3L

U33.207.M30

GX53 U35.207.M30

Pcs 1
Kg 47,8
mc 0,414

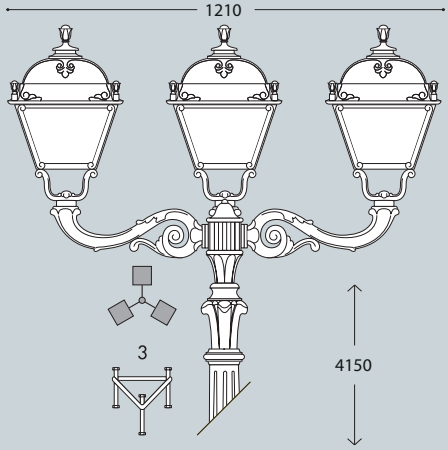

HOREB ADAM/SIMON 2L

U33.207.M20

GX53 U35.207.M20

Pcs 1
Kg 41,8
mc 0,342

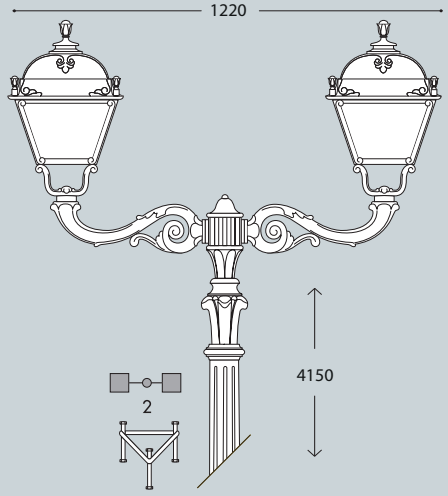

KARMEL 3000/SIMON

LARGE SIZE

MADE IN ITALY

KARMEL 3000/SIMON

LARGE SIZE

KARMEL 3000 OFIR/SIMON 2L

U33.231.R20

GX53 U35.231.R20

Pcs 1
Kg 36,5
mc 0,295

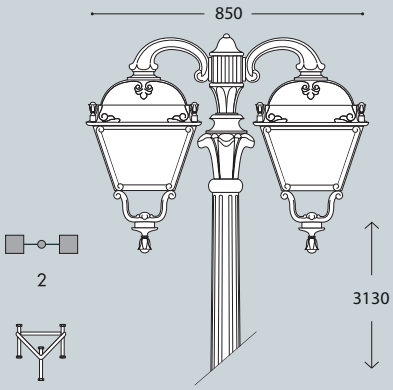

KARMEL 3000 OFIR/SIMON 3L

U33.231.R30

GX53 U35.231.R30

Pcs 1
Kg 41,1
mc 0,369

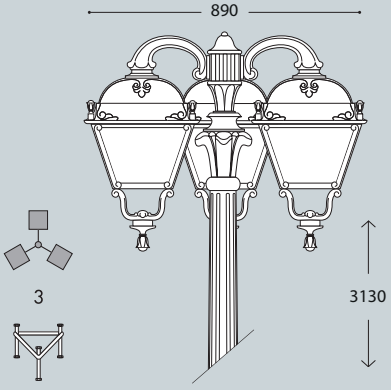

KARMEL 3000/SIMON

U33.231

GX53 U35.231

Pcs 1
Kg 30,1
mc 0,223

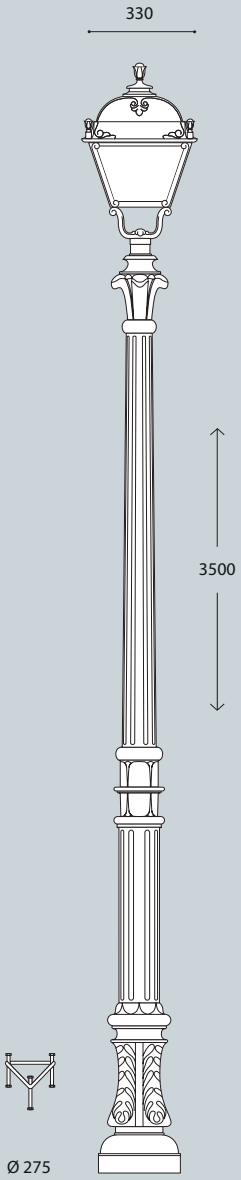

KARMEL 3000 OFIR/SIMON 2L

U33.231.R20

GX53 U35.231.R20

Pcs 1
Kg 36,5
mc 0,295

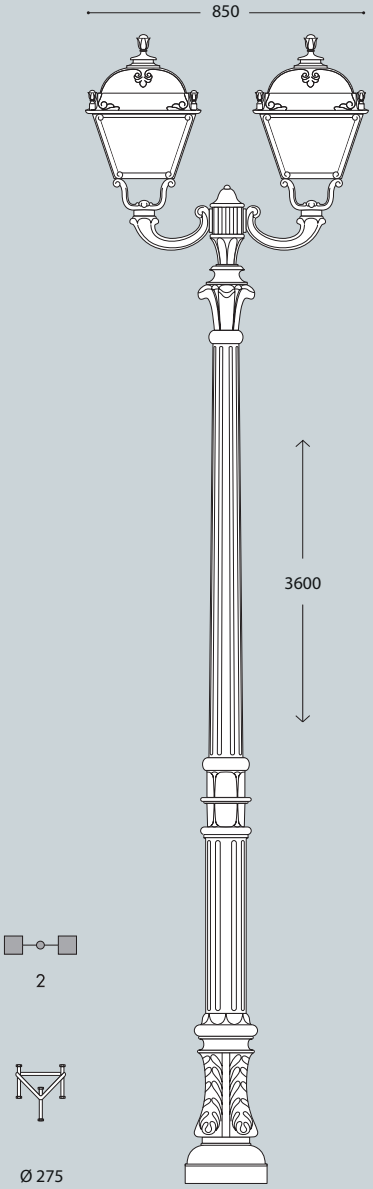

KARMEL 3000 OFIR/SIMON 3L

U33.231.R30

GX53 U35.231.R30

Pcs 1
Kg 41,1
mc 0,369

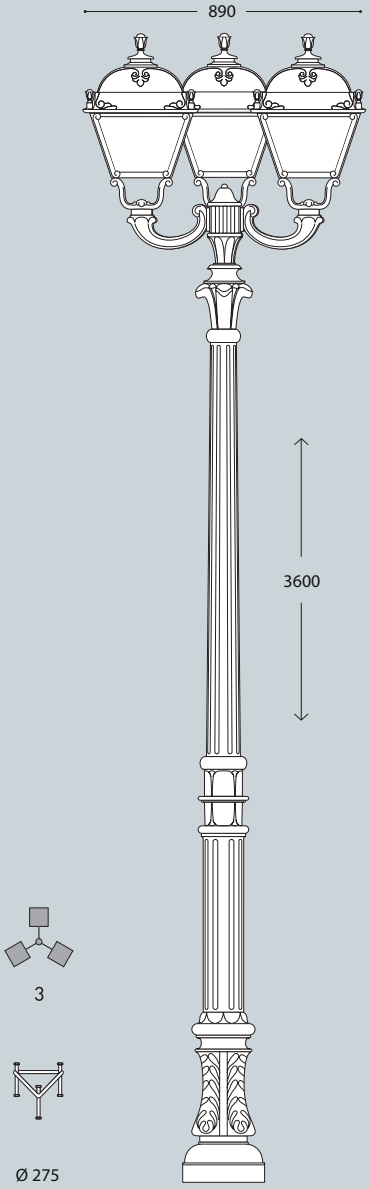

KARMEL 3500-4000/SIMON

LARGE SIZE

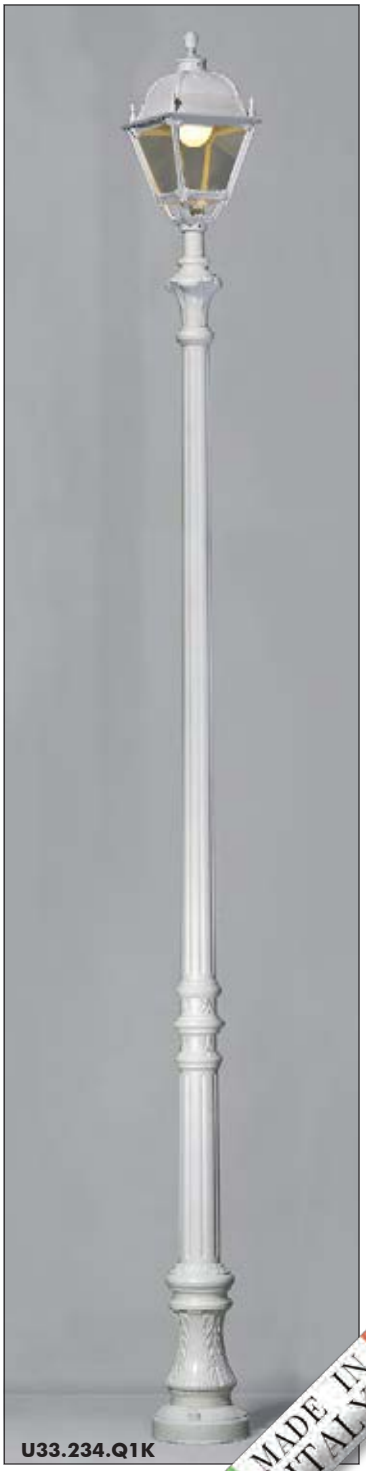

MADE IN ITALY

KARMEL 3500-4000/SIMON

LARGE SIZE

KARMEL 3500/SIMON	
	U33.234
GX53	U35.234

Pcs 1
Kg 32,6
mc 0,249

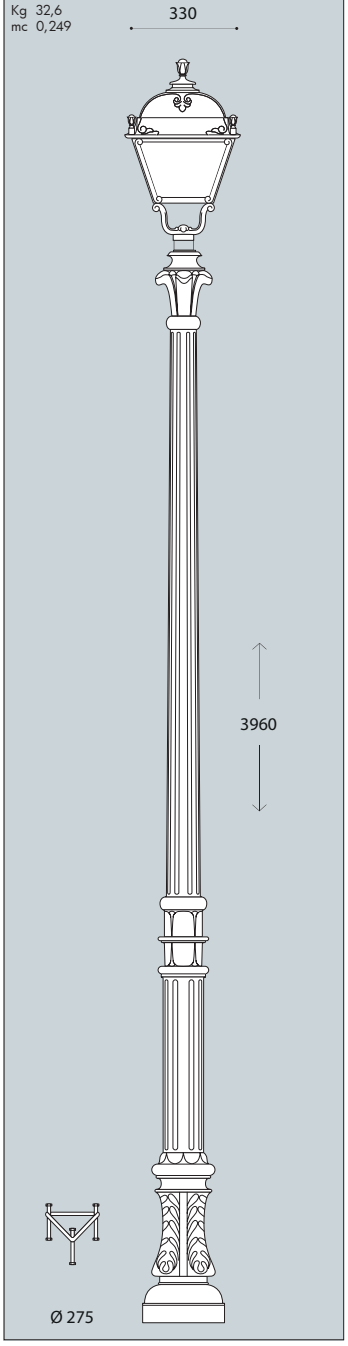

KARMEL 3500 ADAM/SIMON 2+1	KARMEL 4000 ADAM/SIMON 2+1
U33.234.M21	U33.237.M21
GX53 U35.234.M21	U35.237.M21

Pcs 1
Kg 46,4
mc 0,404

Pcs 1
Kg 48,8
mc 0,431

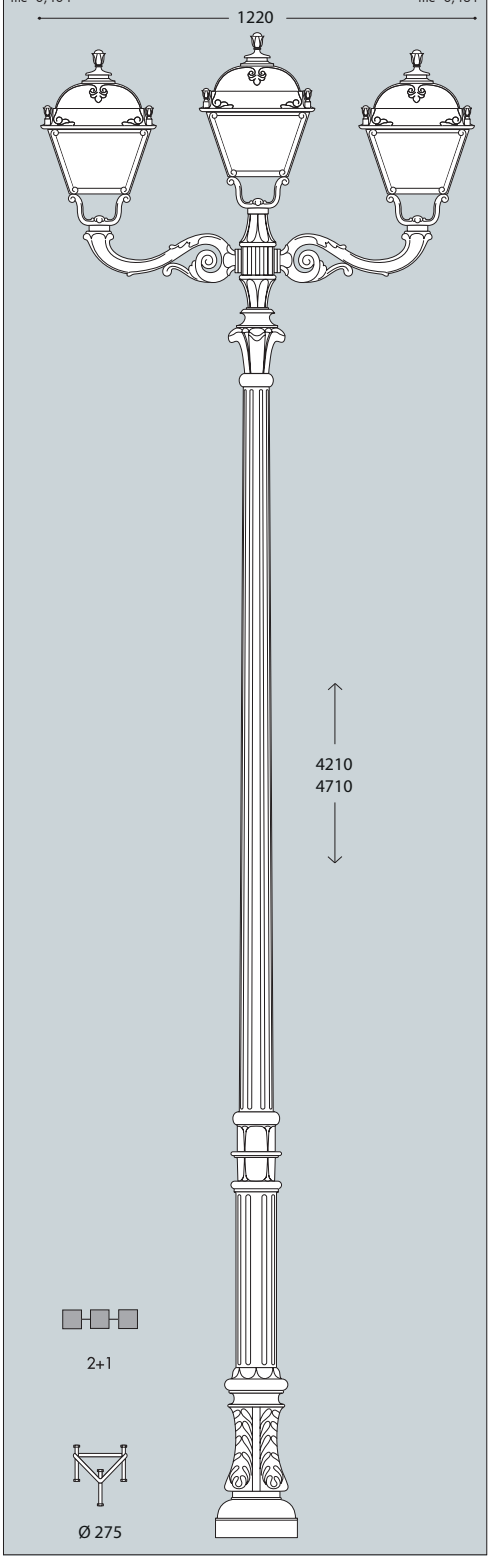

KARMEL 3500 ADAM/SIMON 3L	KARMEL 4000 ADAM/SIMON 3L
U33.234.M30	U33.237.M30
GX53 U35.234.M30	U35.237.M30

Pcs 1
Kg 47,8
mc 0,414

Pcs 1
Kg 50,3
mc 0,441

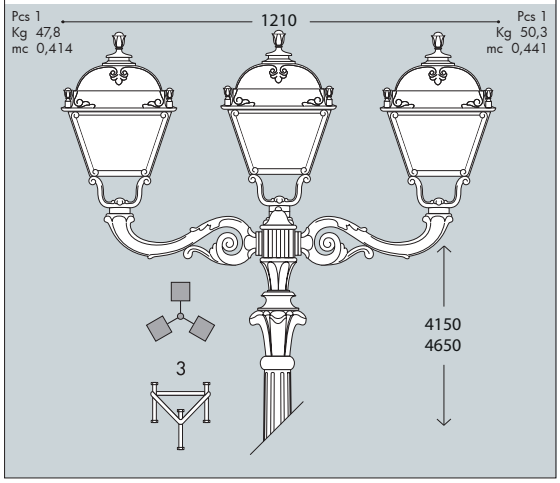

KARMEL 3500 ADAM/SIMON 3+1	KARMEL 4000 ADAM/SIMON 3+1
U33.234.M31	U33.237.M31
GX53 U35.234.M31	U35.237.M31

Pcs 1
Kg 52,4
mc 0,476

Pcs 1
Kg 54,8
mc 0,503

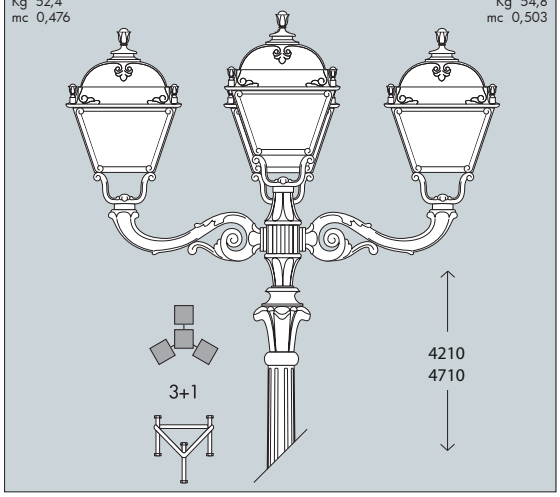

KARMEL 3500 ADAM/SIMON 2L	KARMEL 4000 ADAM/SIMON 2L
U33.234.M20	U33.237.M20
GX53 U35.234.M20	U35.237.M20

Pcs 1
Kg 41,8
mc 0,342
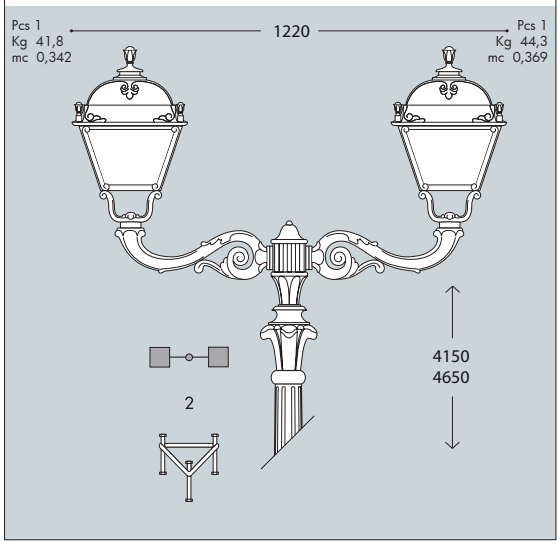
Pcs 1
Kg 44,3
mc 0,369